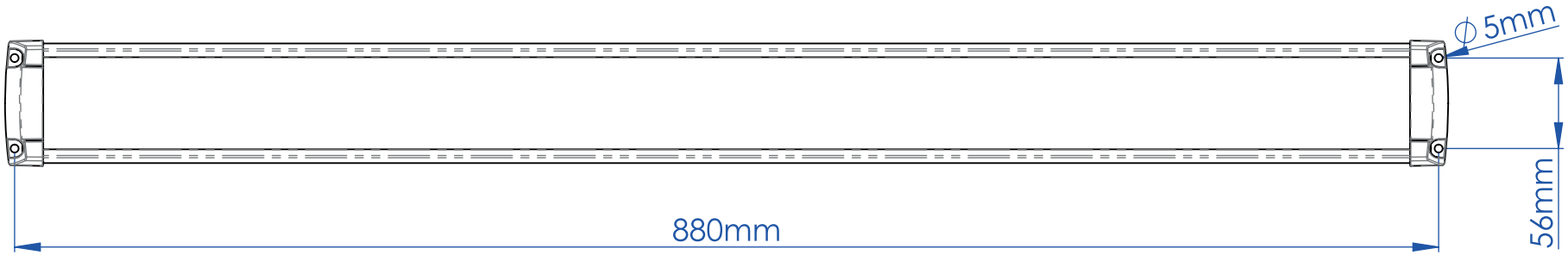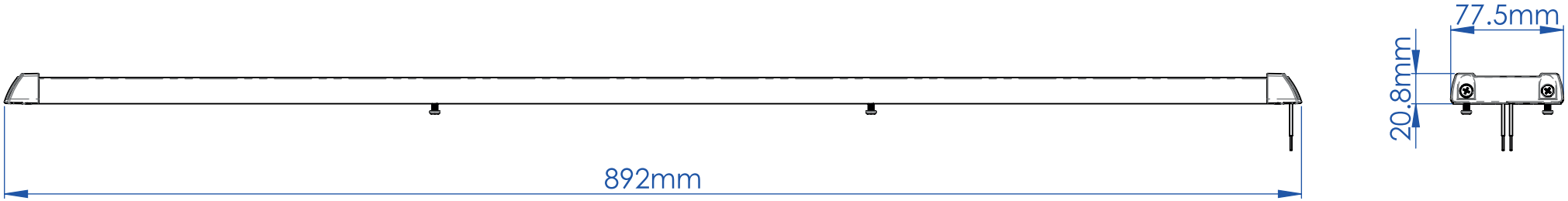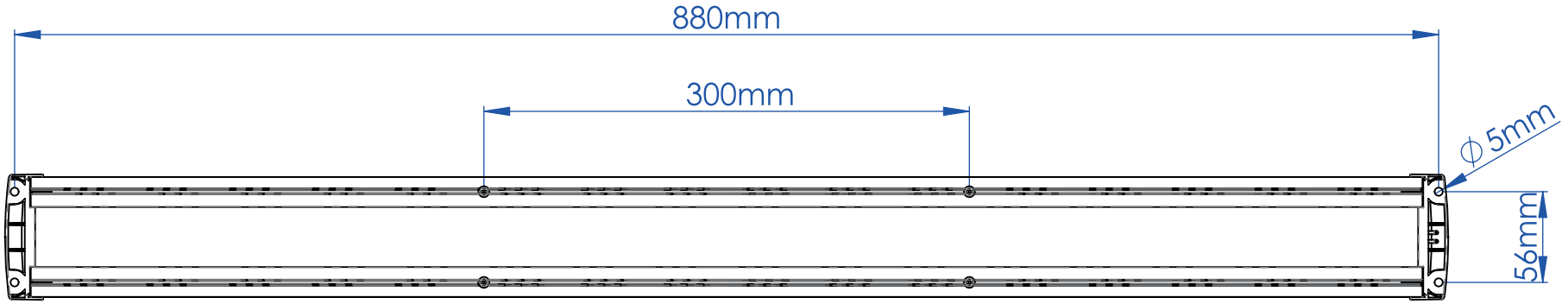Dimension